Formal Modeling of Testing Software for Cyber-Physical Automation Systems

Igor Buzhinsky, Cheng Pang, Valeriy Vyatkin

igor.buzhinsky@gmail.com

ITMO UNIVERSITY

Aalto University
School of Electrical Engineering

DIAS Workshop, Helsinki

August 21, 2015

Introduction

- Cyber-physical systems can be modeled formally in a closed loop
- That is, the plant's and the controller's models are connected with sensor and actuator connections
- A known way of modeling such systems is the formalism of net condition/event systems (NCES), which are based on Petri nets
- Such models were previously used for **verification**, and we present a framework which utilizes them for **testing**

Net condition/event systems (NCES)

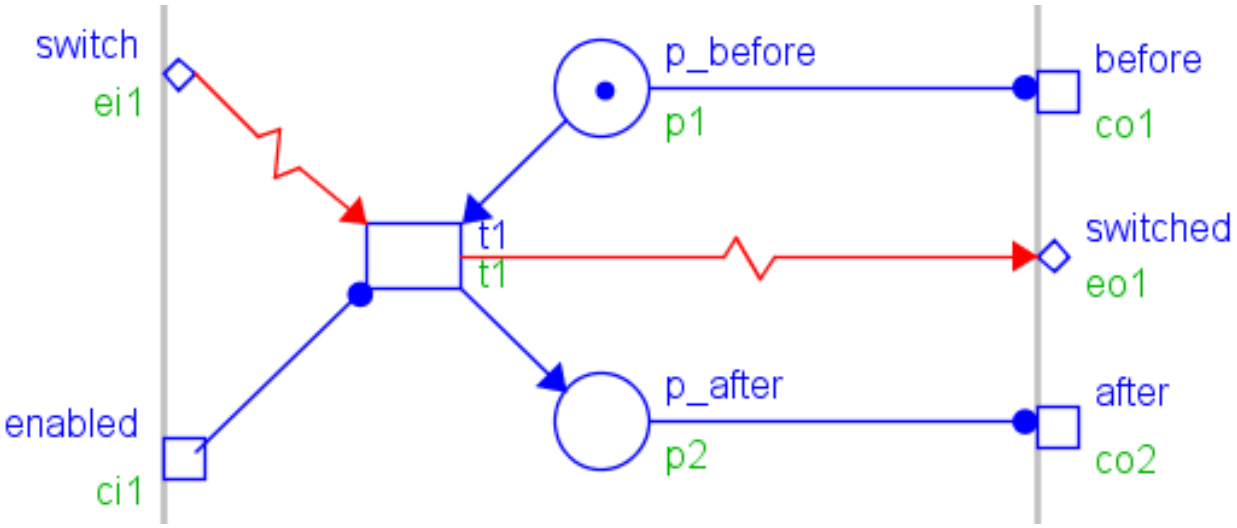

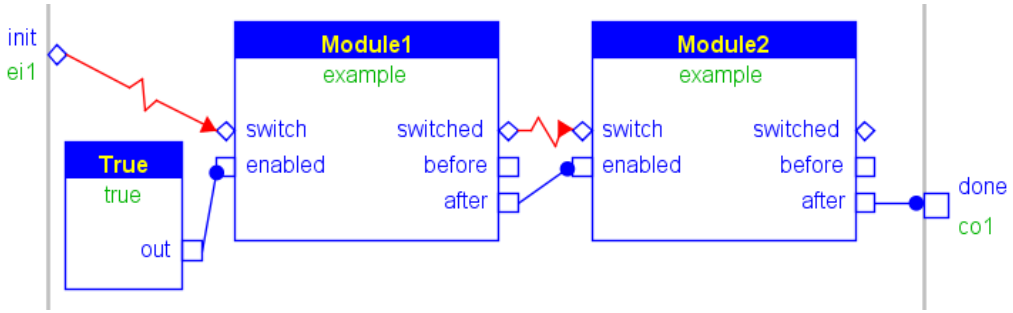

Suitable for modeling:

- Cyber-physical systems
- In particular, distributed ones
- IEC 61131 and IEC 61499 function blocks

Case example: pneumatic cylinder

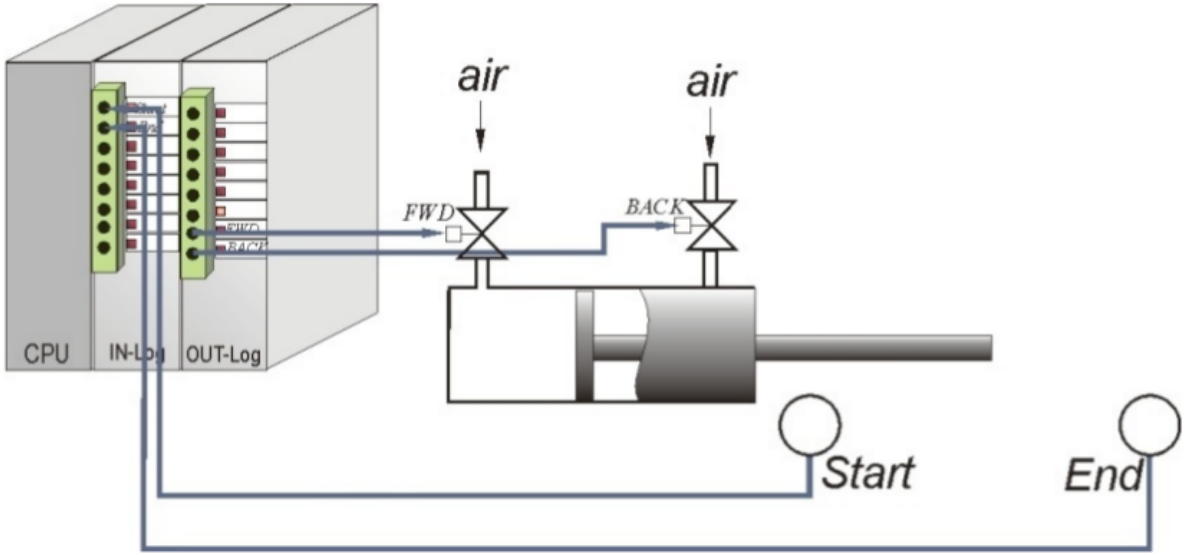

- Two Boolean inputs (extend, retract)
- Two Boolean outputs (cylinder positions: start, end)
- Internal state: position (start, intermediate, end) and movement direction (left, right, stopped)
- A simple controller infinitely extends and retracts the cylinder

Proposed framework: overview

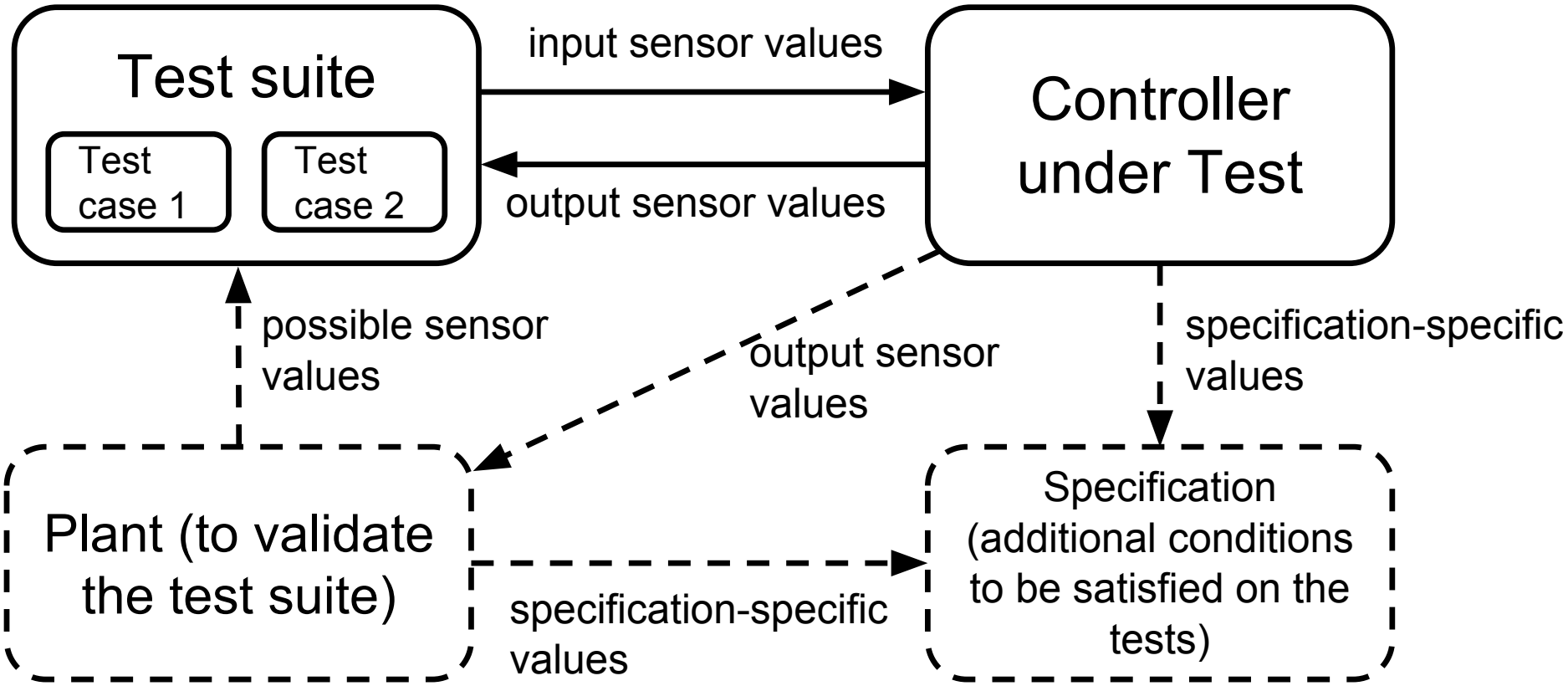

Proposed framework: the test suite and the controller

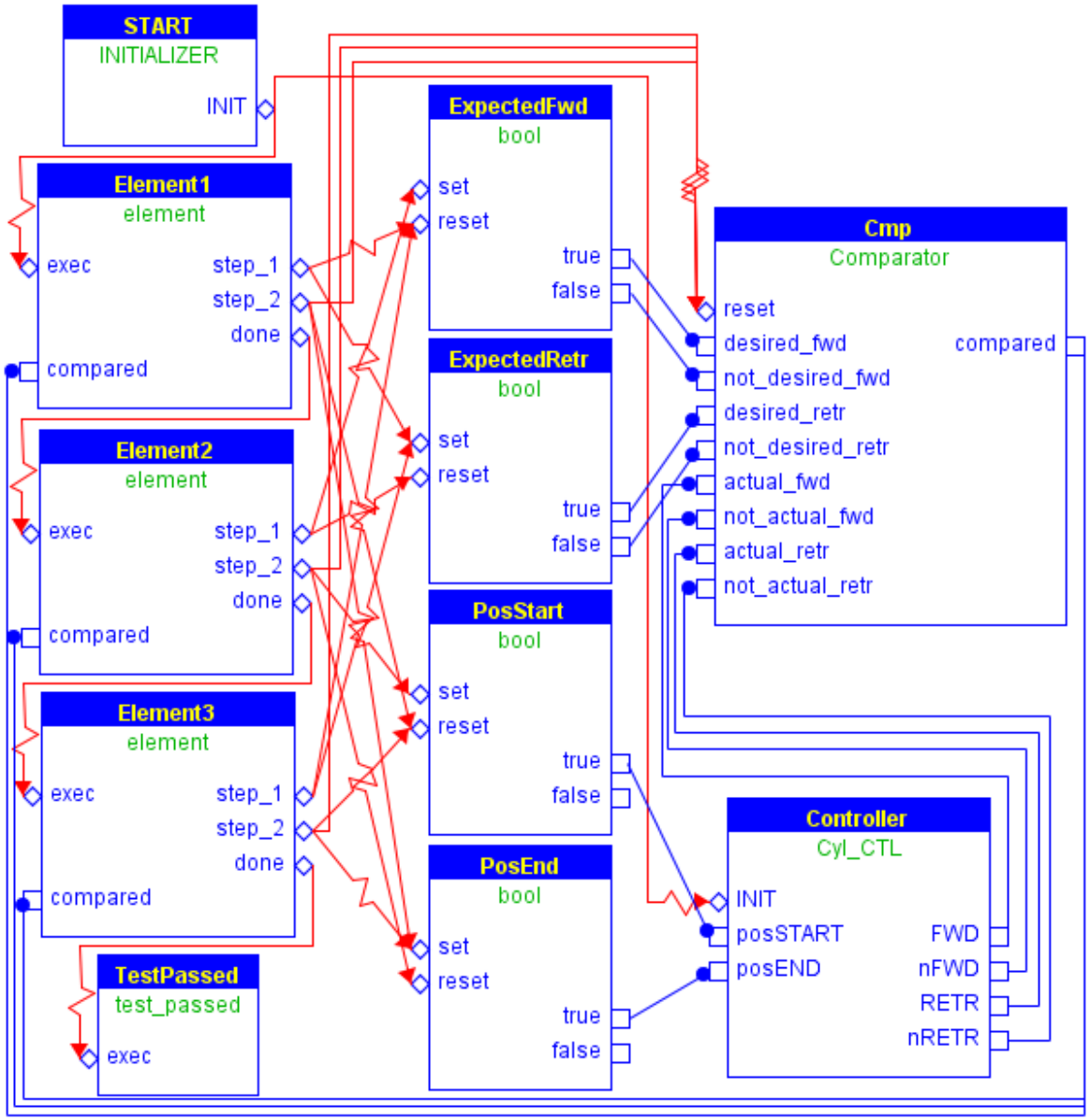

- Sequence of test elements

1. Set input and expected values
2. Wait until the controller produces desired values

- If it does not, then there is a deadlock and the test is failed

State space example

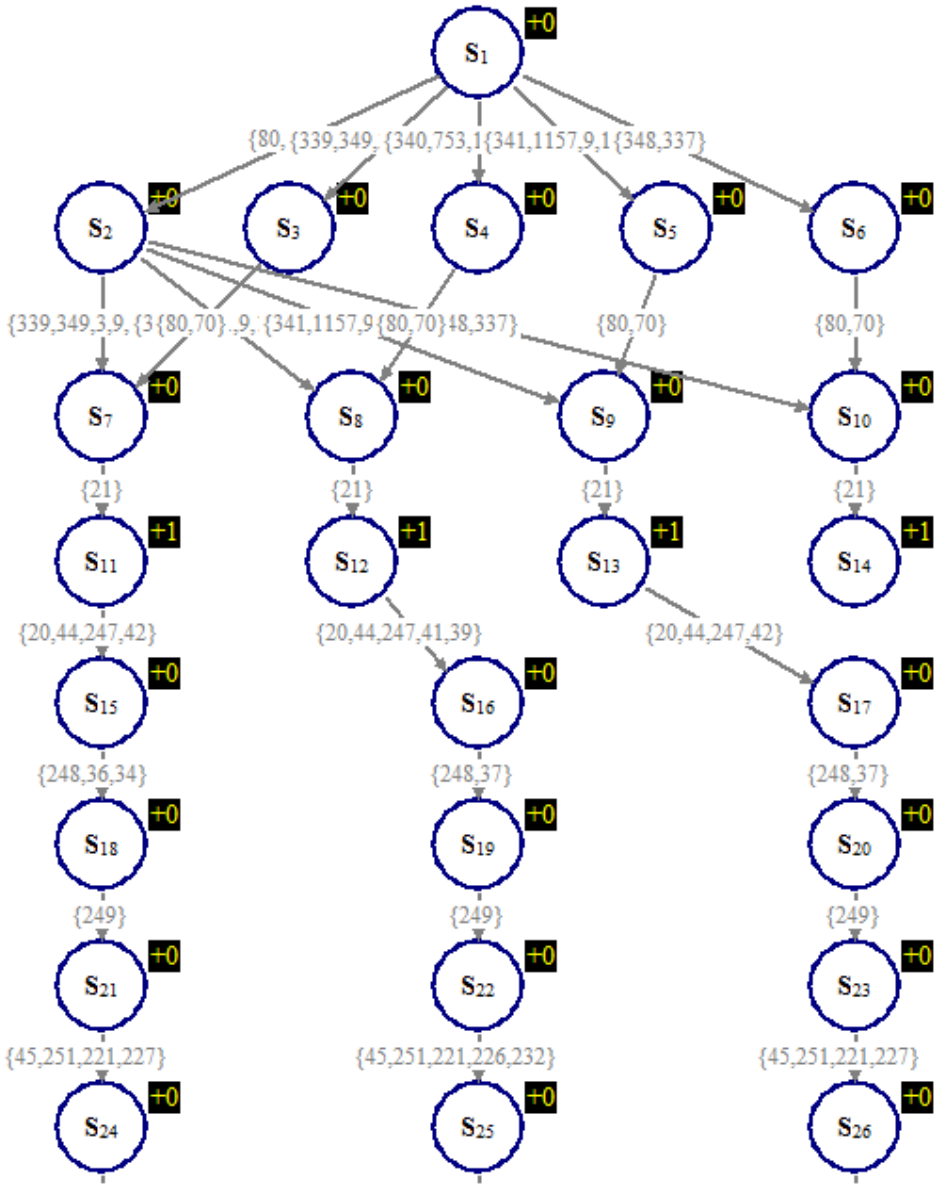

- An example for three test cases
- Vertices are states, edges are transition in NCES which execute simultaneously
- After initialization the state graph splits into several path graphs
- The final state of each path tells whether the test case is passed or failed

Proposed framework: the plant's model (optional)

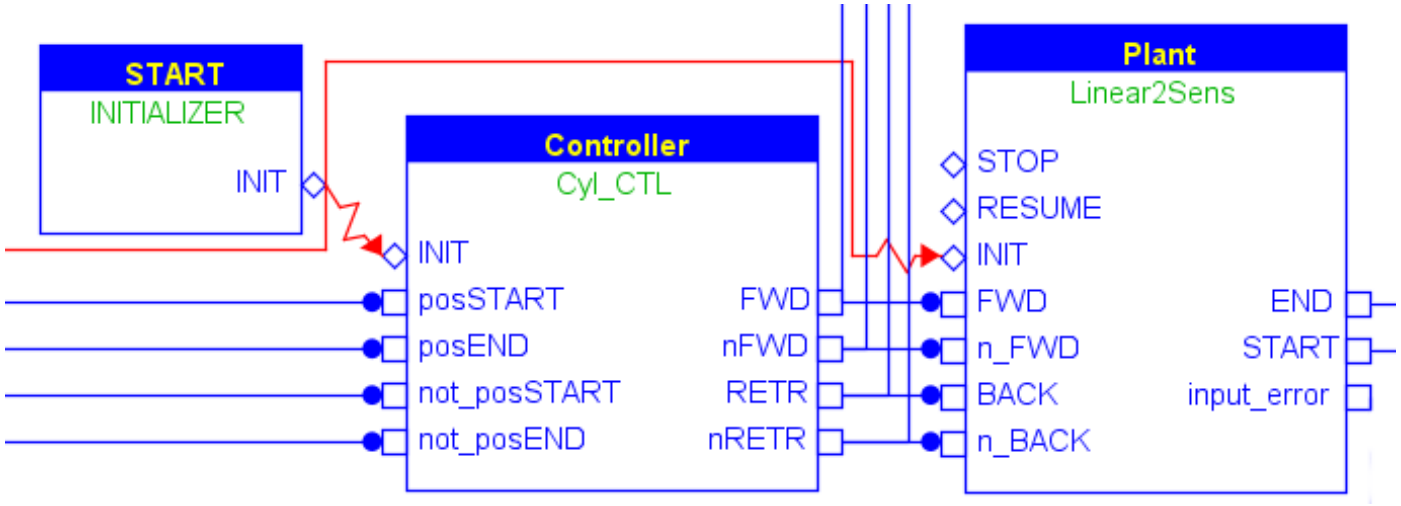

- If the plant's model is present, we have a closed-loop system
- But the state space is built only for the test cases, not for all possible behaviours of the plant
- This allows to analyze the system when the usual state space is too big
- In particular, the plant's model allows to check the correctness of test inputs (i.e. that they can be generated by the plant)

Proposed framework: specification (optional)

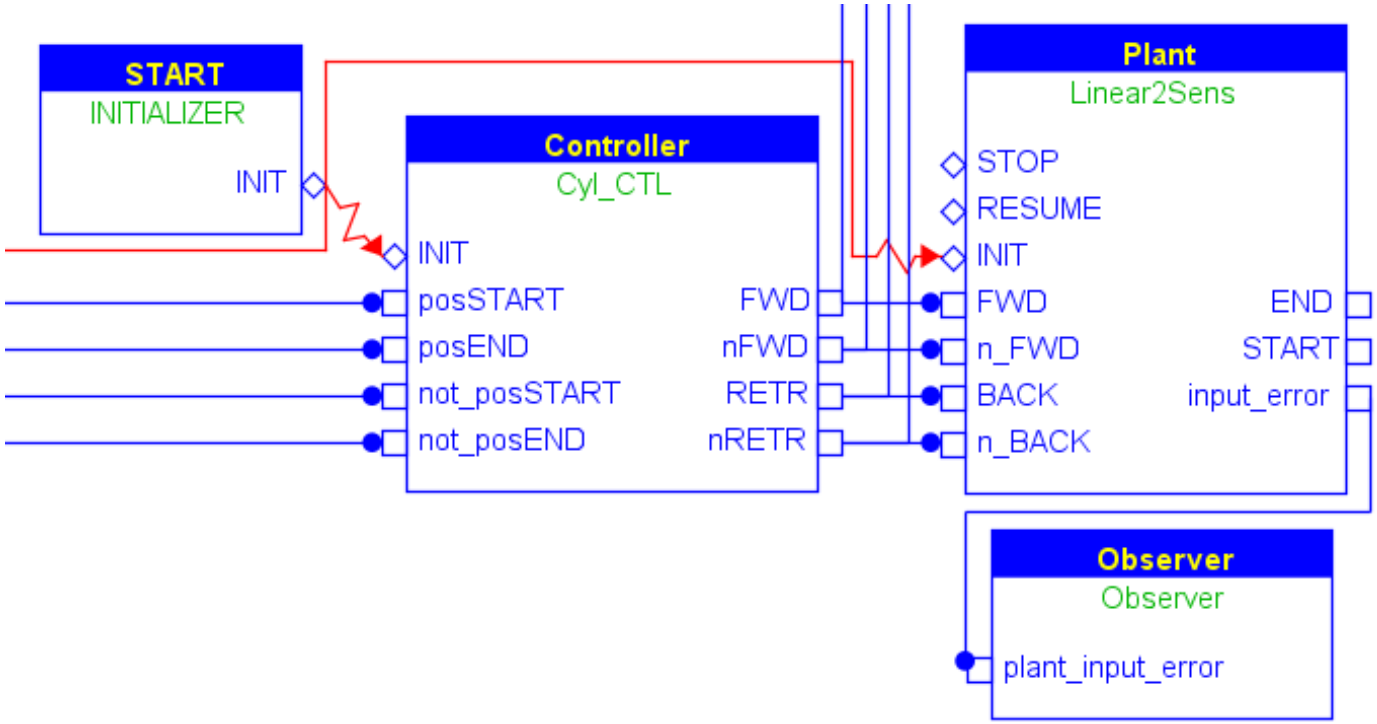

- Additional conditions for the system to hold during test execution
- Example: the plant receives EXTEND and RETRACT simultaneously and reports an error
- This error is caught by the specification ('Observer' module)

Additional use case: time modeling

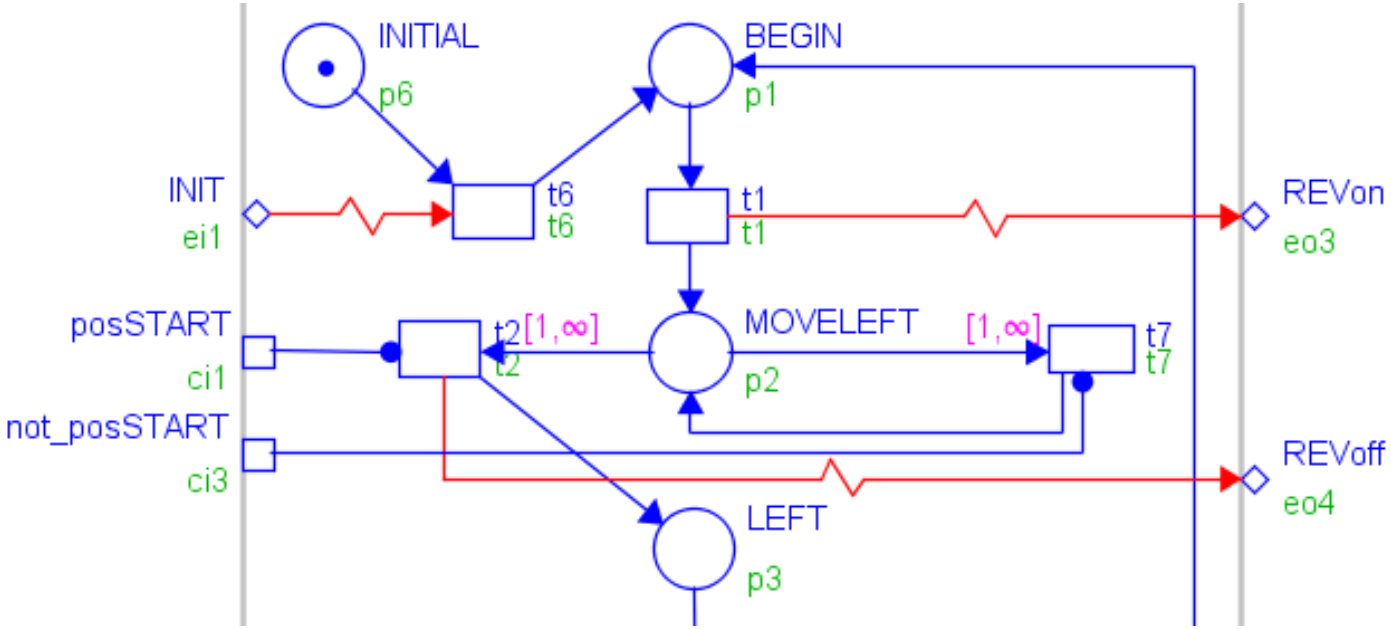

- TNCES is the extension of NCES which supports discrete time
- If the system includes delays and especially timers, there is no need to wait during testing

Additional use case: controllers with parameters and product lines

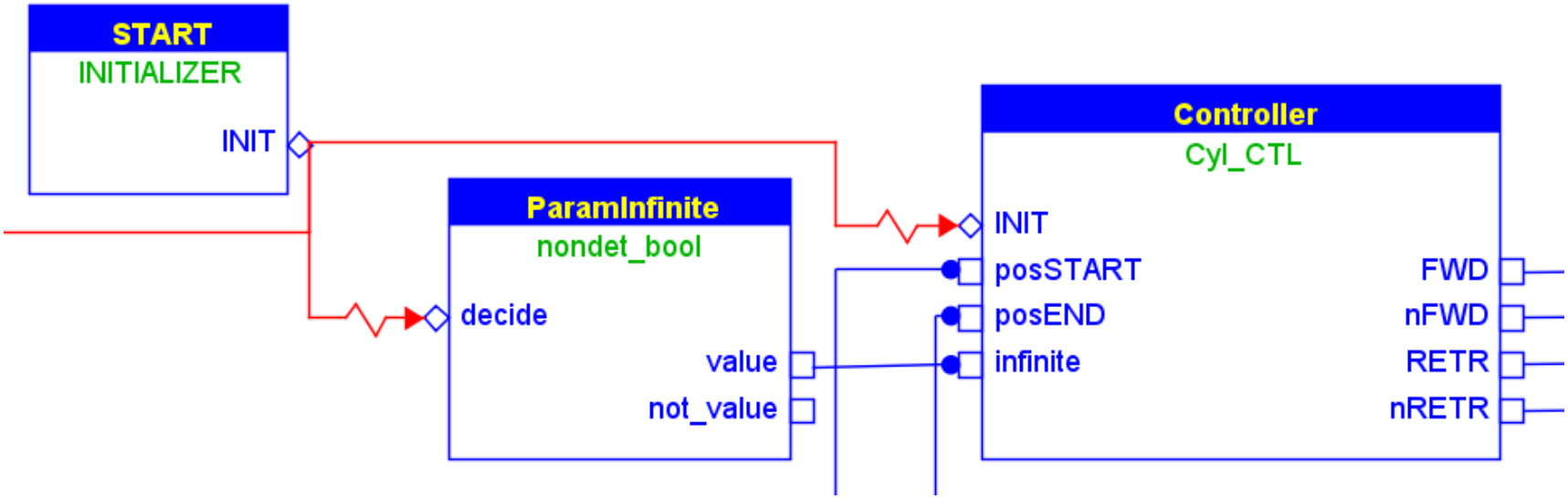

- If there is a family of controllers to test (i.e. the case of a product line), or a controller with parameters, the entire set of controllers can be tested in a single state space construction
- This can be implemented as nondeterministic controller / module / parameter selection prior to test execution

Results

A framework for formal modeling of test execution, which can be used to:

- Analyze the system when its usual state space is too big
- Validate test suites
- Test software with delays and timers without the need to wait
- Test families of related controllers

The applicability of the framework was shown on the Cylinder example

Future work

- Tests which account for time, e.g. testing PLCs cycle by cycle
- Applying the framework on larger systems
- Generation of negative tests based on the plant's model
- Coverage test generation based on the controller's model

Thank you for your attention! Questions?

Formal Modeling of Testing Software for Cyber-Physical Automation Systems

Igor Buzhinsky, Cheng Pang, Valeriy Vyatkin

igor.buzhinsky@gmail.com